FIRST ANGLE PROJECTION

(ALL DIMENSIONS ARE IN mm)

DRG. NO. 2-94-11-0147

SHT. 01 OF 01

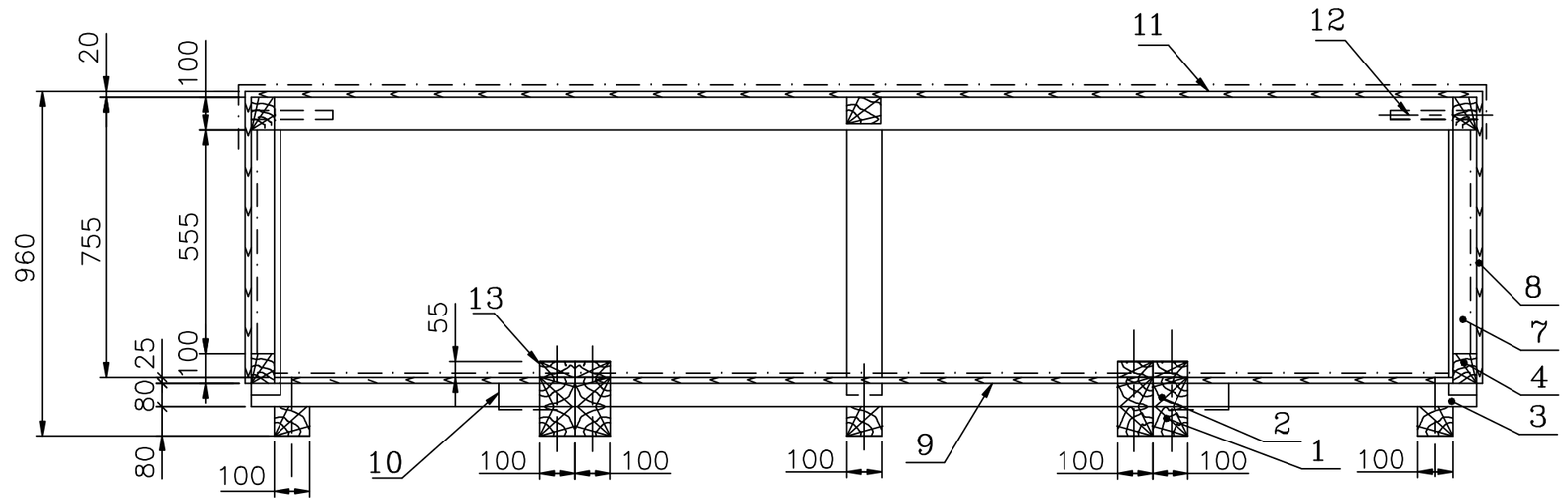

SECTION – 'AA'

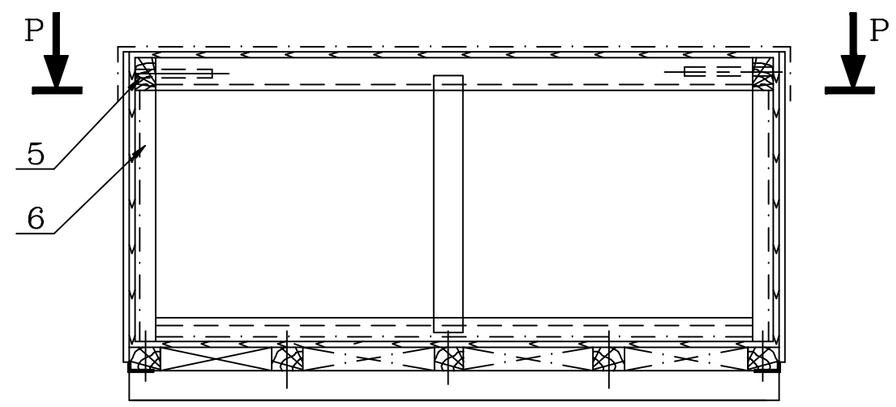

SECTION –'BB'

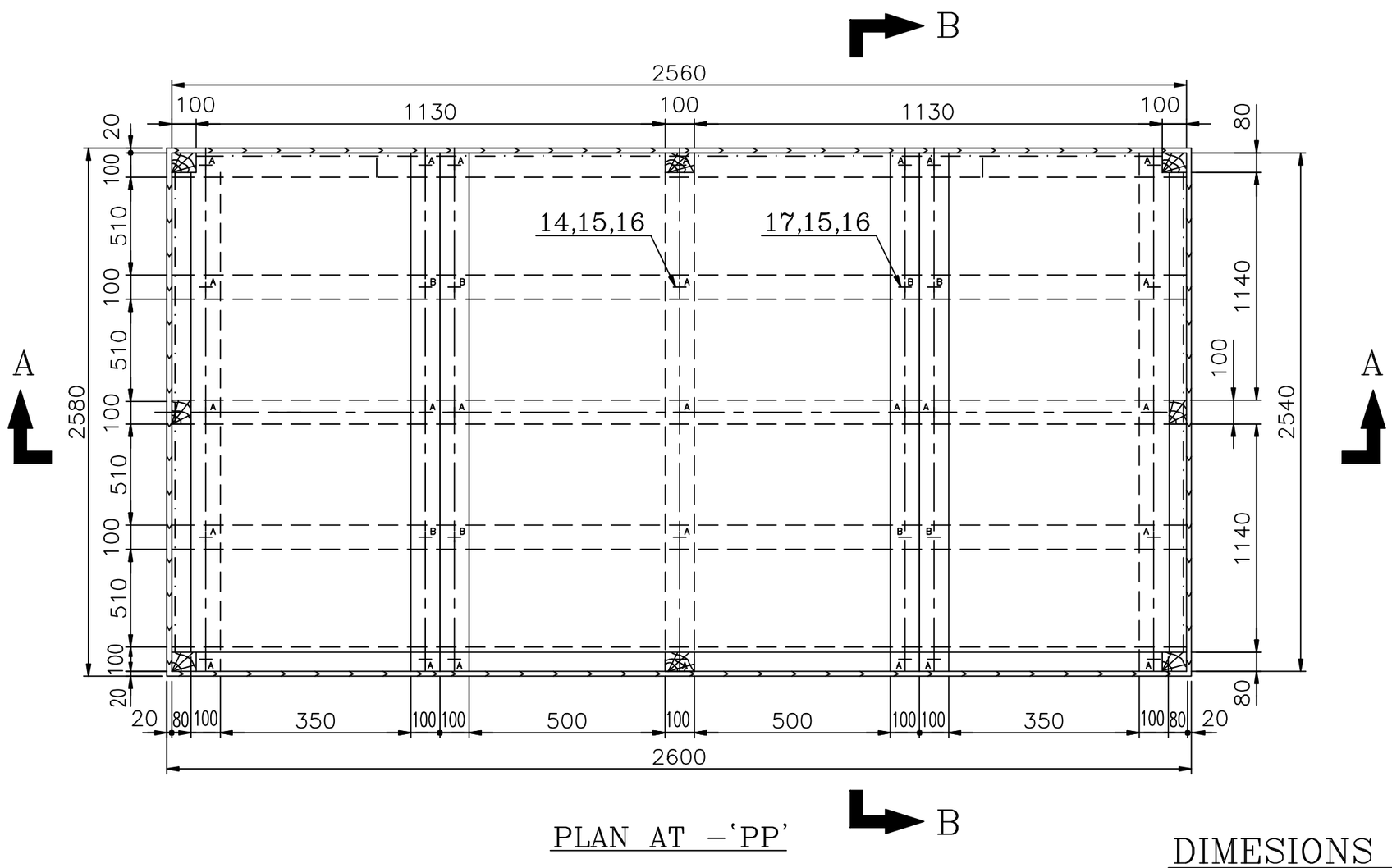

PLAN AT –'PP'

NOTE :–

1. PACKING INSTRUCTIONS AS PER HY:0490572
2. PACKING WOOD AS PER PS :51463
3. COMPONENT PRESERVATION AS PER HY :0490563

POS NO	DESCRIPTION	SIZE	NO.OF PCS	WOOD CONTENT
17	SQ.HD.BOLT–"B"	M12 x 240	8	–
16	WASHER	ø14	35	–
15	NUT	M12	35	–
14	SQ.HD.BOLT–"A"	M12 x200	27	–
13	PEDESTAL BEAM	55x 100 x 2380	4	0.05236
12	STEEL BRACKETS	200 x 200 x 30	4	–
11	H.B.P. COATED KRAFT PAPER.	SIDES&BOTTOM(INSIDE)TOP(OUTSIDE)	–	–
10	LIFTING ANGLES	100 x 100 x 200	4	–
	TOP–PLANKS	20X200X1930	13	0.10036
	TOP BEAM	80X100X2580	2	0.04128
9	BOTTOM PLANKS	25mmTHIICK	11	0.1327
8	PLANK (SIDES&TOP)	20mmTHIICK	55	0.1672
7	STRUT	80 x 100 x 630	2	0.0101
6	STRUT	80 x 100 x 720	6	0.0346
5	HORIZONTAL BEAM	80 x 100 x 2560	2	0.041
4	HORIZONTAL BEAM	80 X 100 X 2380	5	0.0952
3	SUPPORTING BEAM	80 X 100 X 2560	5	0.1024
2	INTERMEDIATE BEAM	80 X 100 X 510	8	0.0326
1	SKID	80 X 100 X 2540	7	0.1422

DIMESIONS OF THE CASE:
2600 x 2580 x 960
NET WEIGHT :–6,500 Kgs.

TYPE OF PRODUCT
OR
NAME OF CUSTOMER/PROJECT

BHARAT HEAVY ELECTRICALS LTD.
HYDERABAD

	NAME	SIGN.	DATE	NO.OF VAR.
DRN.	POORNIMA CAD		24.10.03	NA
CHD.	S.N		24.10.03	
APPD.	T.MURALI		24.10.03	

DEPT. CPDC CODE 840C	UNTOL. DIMS. GR. ℄/M/F	SCALE N.T.S	WEIGHT (KG) NA	REF. TO ASSY. DRG. NA	ITEM NO. NA	NO.OF ITEMS NA

TITLE PACKING CASE FOR GUIDE BLADE CARRIER N–110.8–2/2 TURBINE TYPE HNK–71/28.(RENUSAGAR–II)

CARD CODE NA

DRAWING NO. 2–94–11–0147 REV. 04

SHT. No 01 NO. OF SHT. 01

REV.	DATE	ALTERED	CHD/APPD
04	05.01.08	ALTERED POORNIMA	CHD/APPD S.N/K.G.N
03	24.10.03	ALTERED	CHD/APPD

WOOD CONTENT VALUES ADDED

REDRAWN ON AUTO–CAD.

THE INFORMATION ON THIS DOCUMENT IS THE PROPERTY OF BHARAT HEAVY ELECTRICALS LIMITED. IT MUST NOT BE USED DIRECTLY OR INDIRECTLY IN ANY WAY DETRIMENTAL TO THE INTEREST OF THE COMPAY

COMPUTER FILE NAME 2940147.DWG

REF. DRG. NO.

SIGN. AND DATE

INVENTORY NO

GENERAL DIMENSIONAL LIMITS,FITS & TOLERANCES AS PER HY0230261